L1 **312 x 215 x 101.5mm**
Minimum Sheet Size: 680 x 445mm
Open - Back Page Flap -
Double Creases

L2 **307 x 220 x 70mm**
Minimum Sheet Size: 700 x 415mm
Open - Back Page Flap -
Double Creases
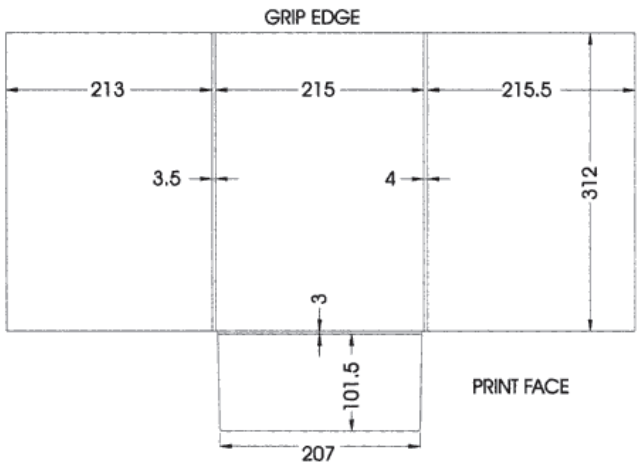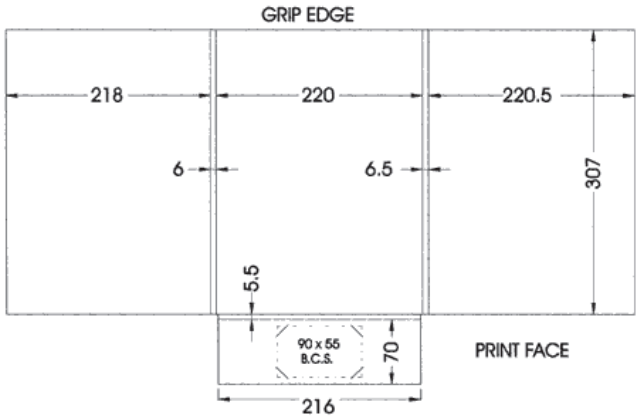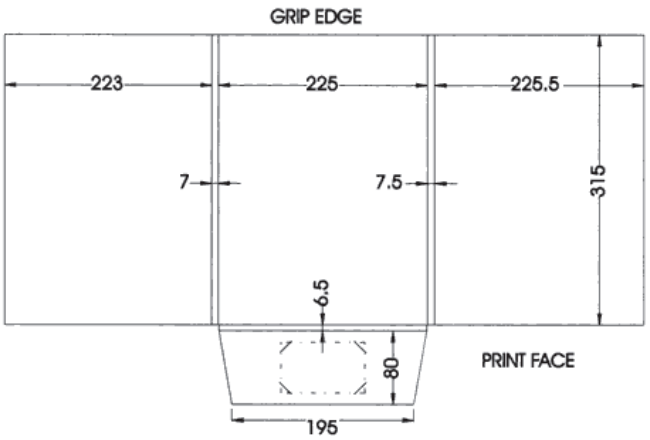
L3 **315 x 225 x 80mm**
Minimum Sheet Size: 720x 430mm
Open - Back Page Flap -
Double Creases